UML

Sequence Diagrams

1) Symbols and their Relations

Sequence Diagram:

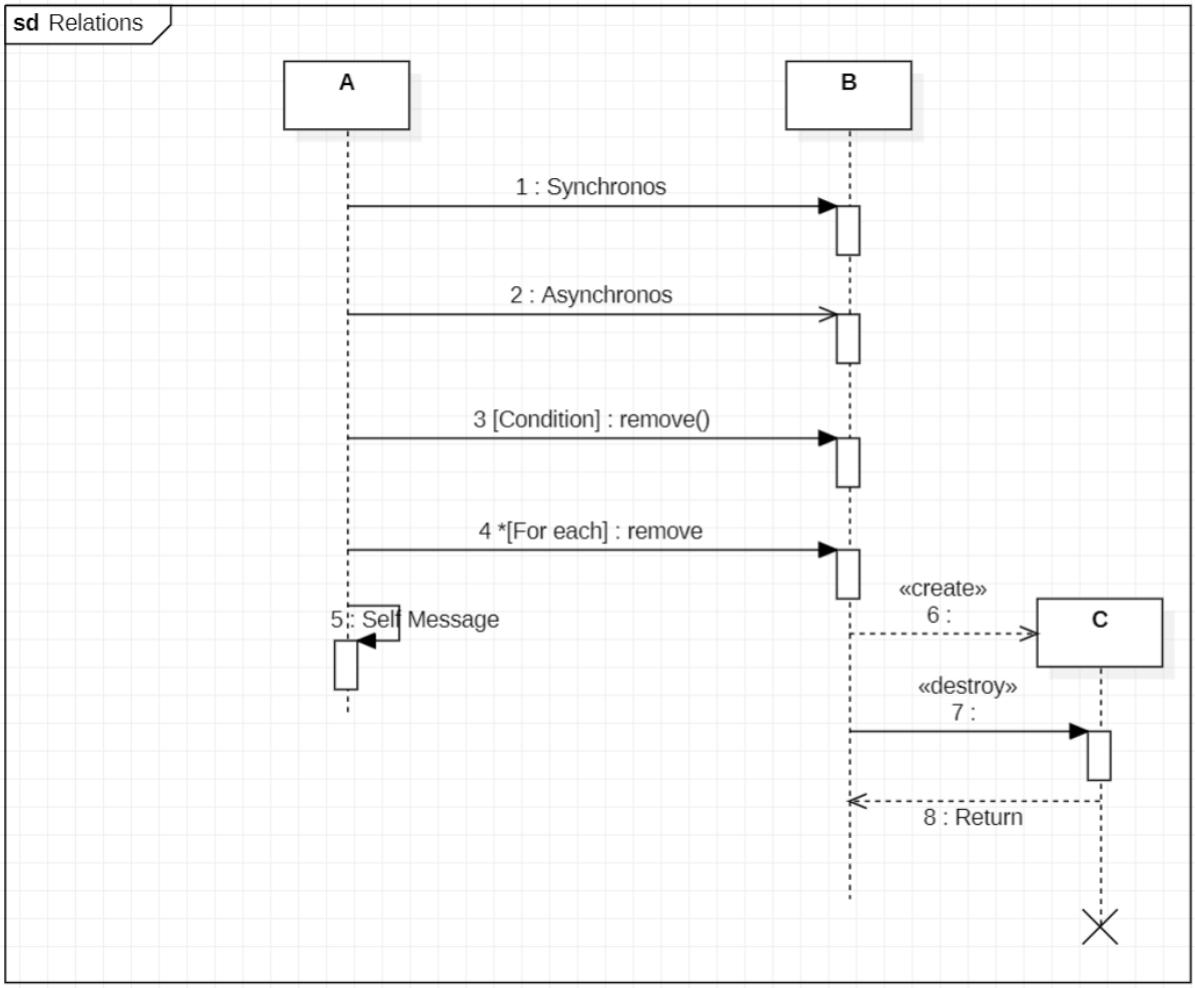

2) Phone Call

Sequence Diagram:

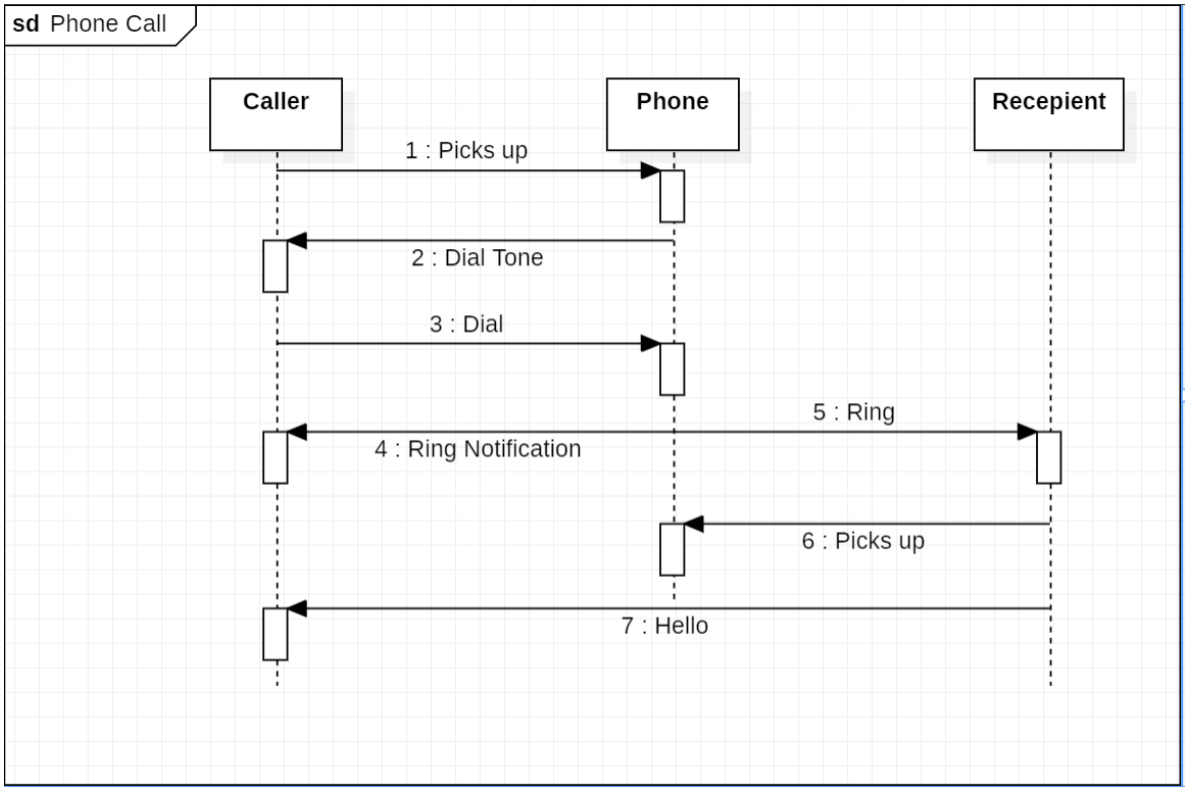

3) User Login Page

Sequence Diagram:

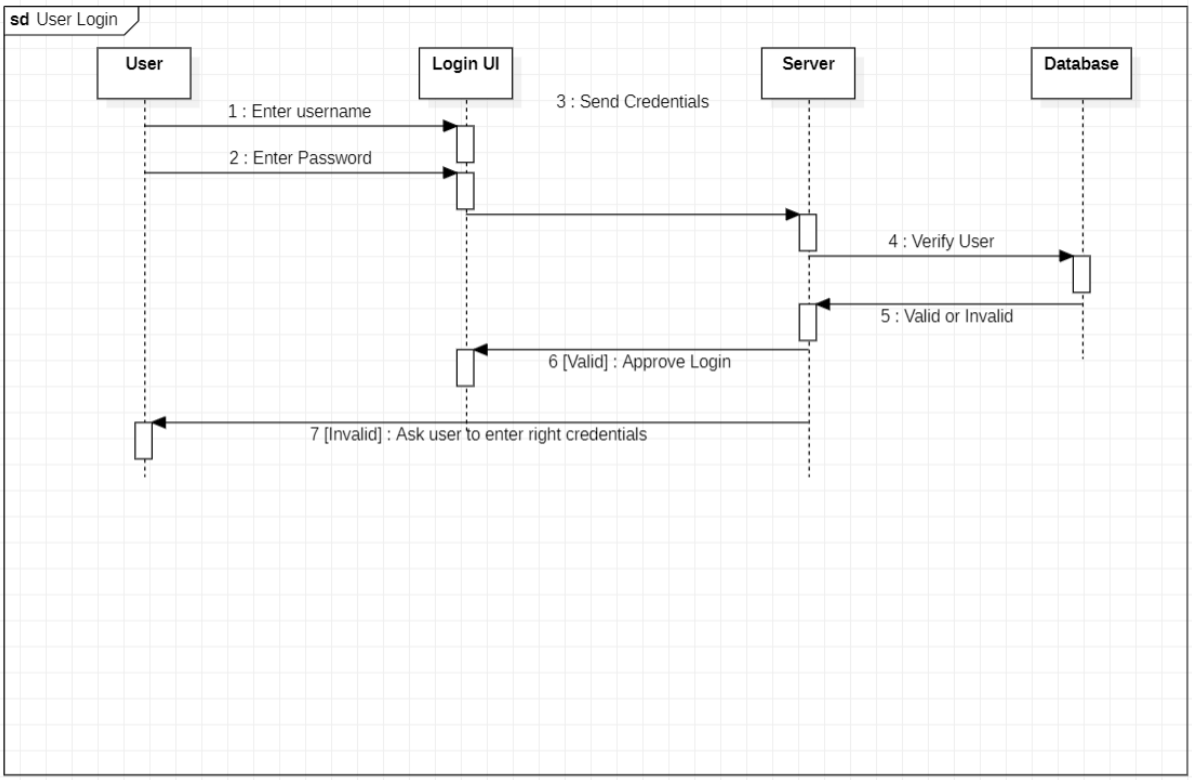

4) Reservations

Sequence Diagram:

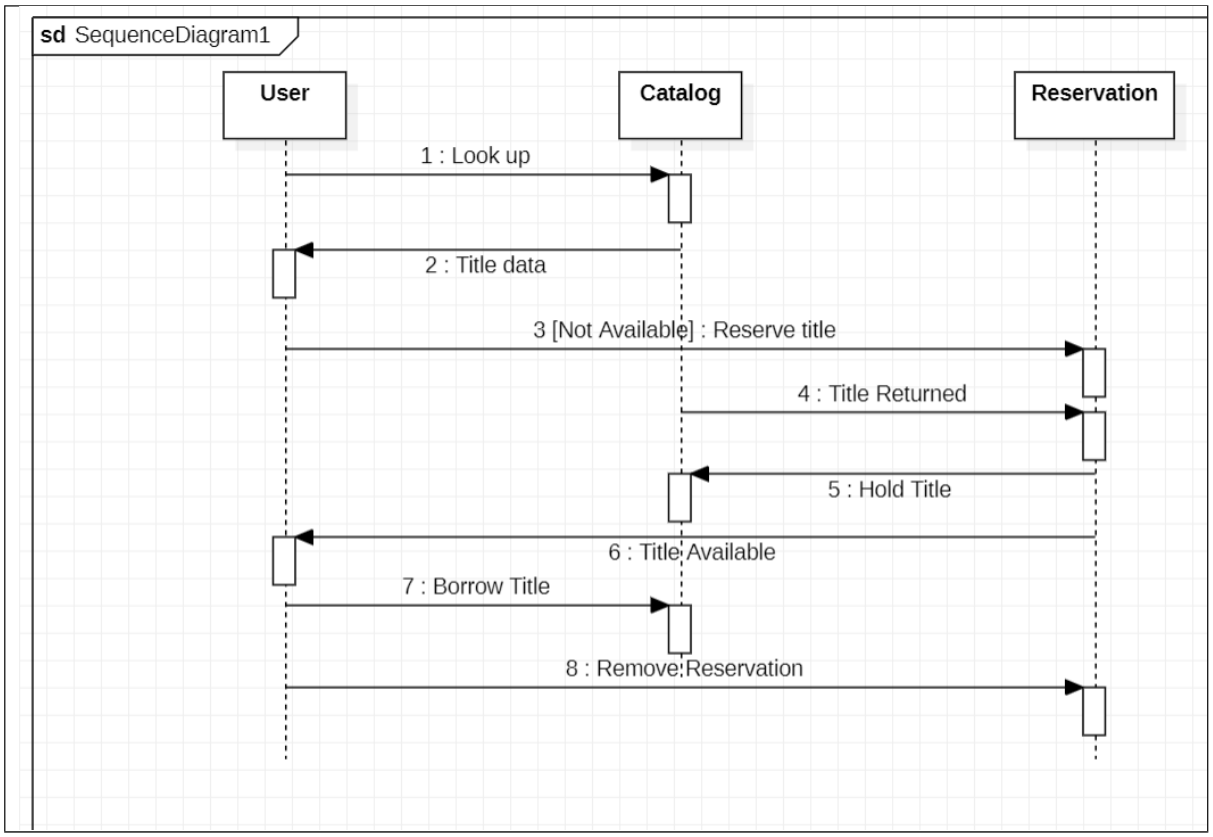

5) Online Order Placement System
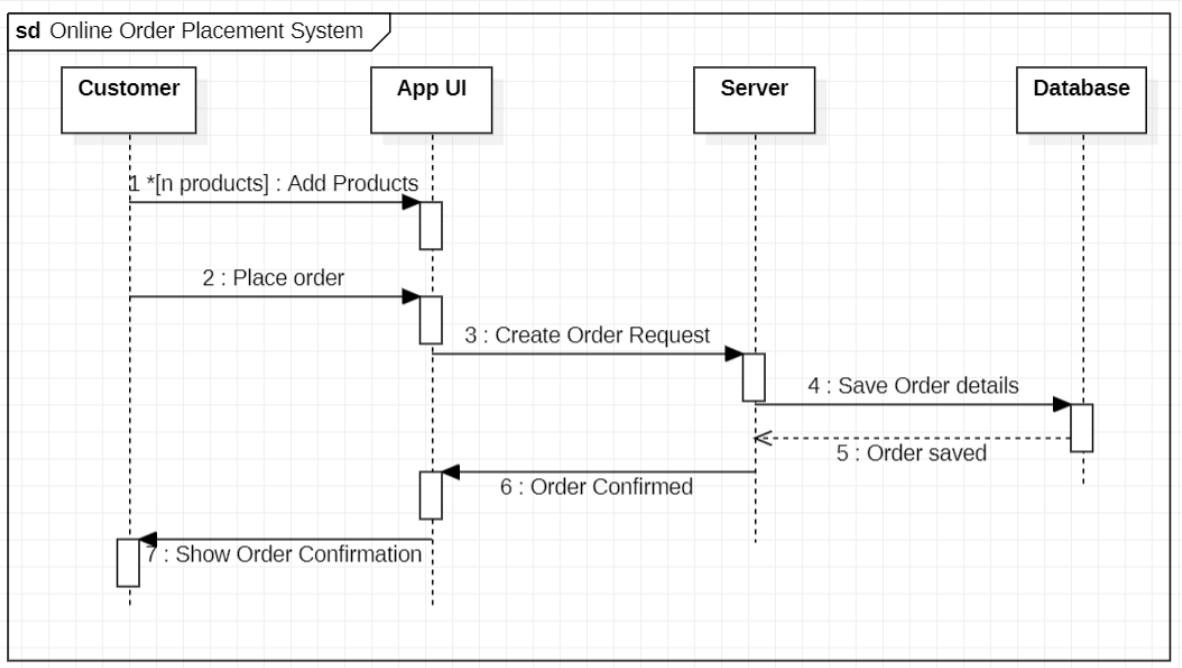
Sequence Diagram: